HEADLIGHT (w/o DAYTIME RUNNING LIGHT)

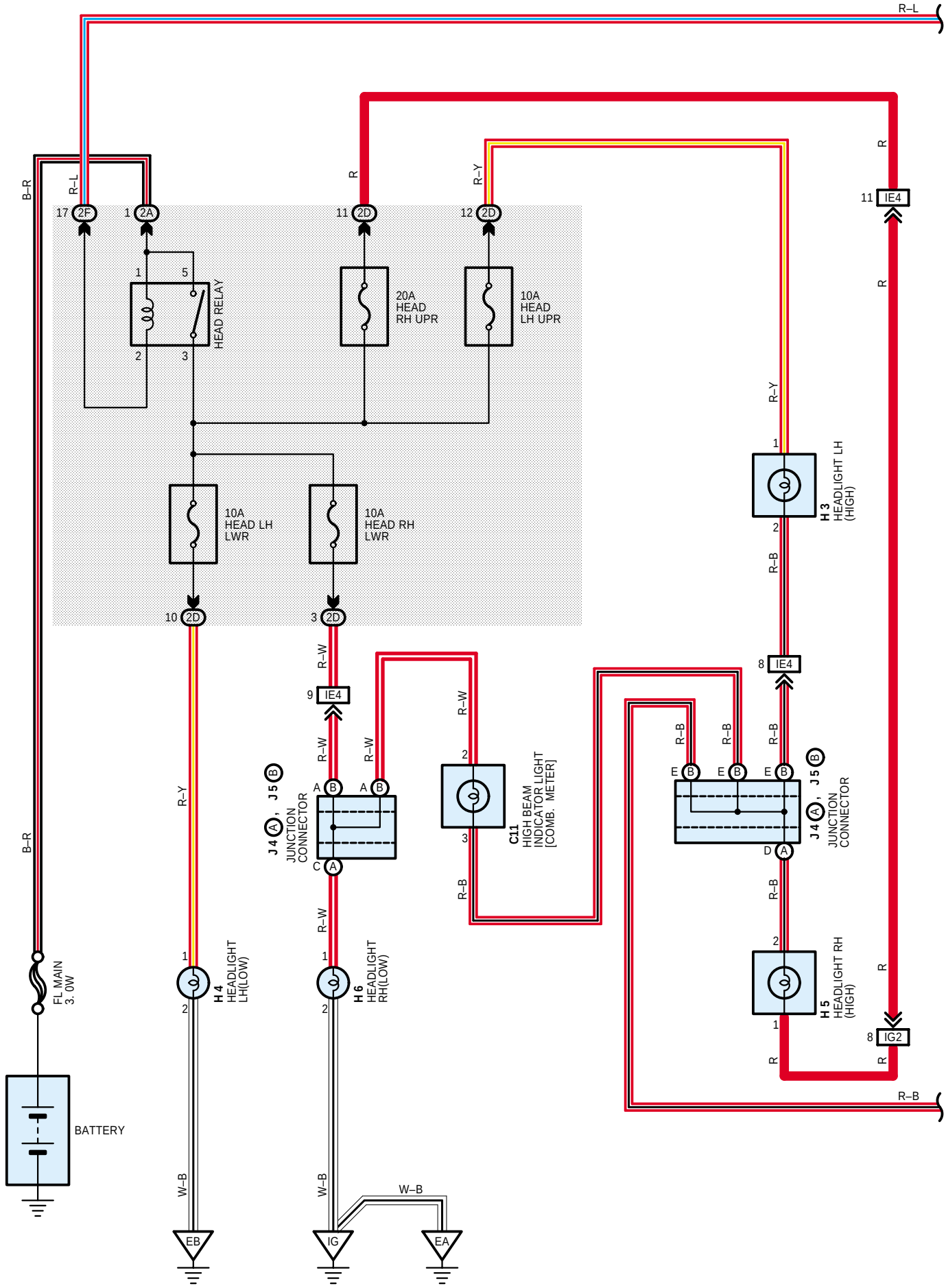

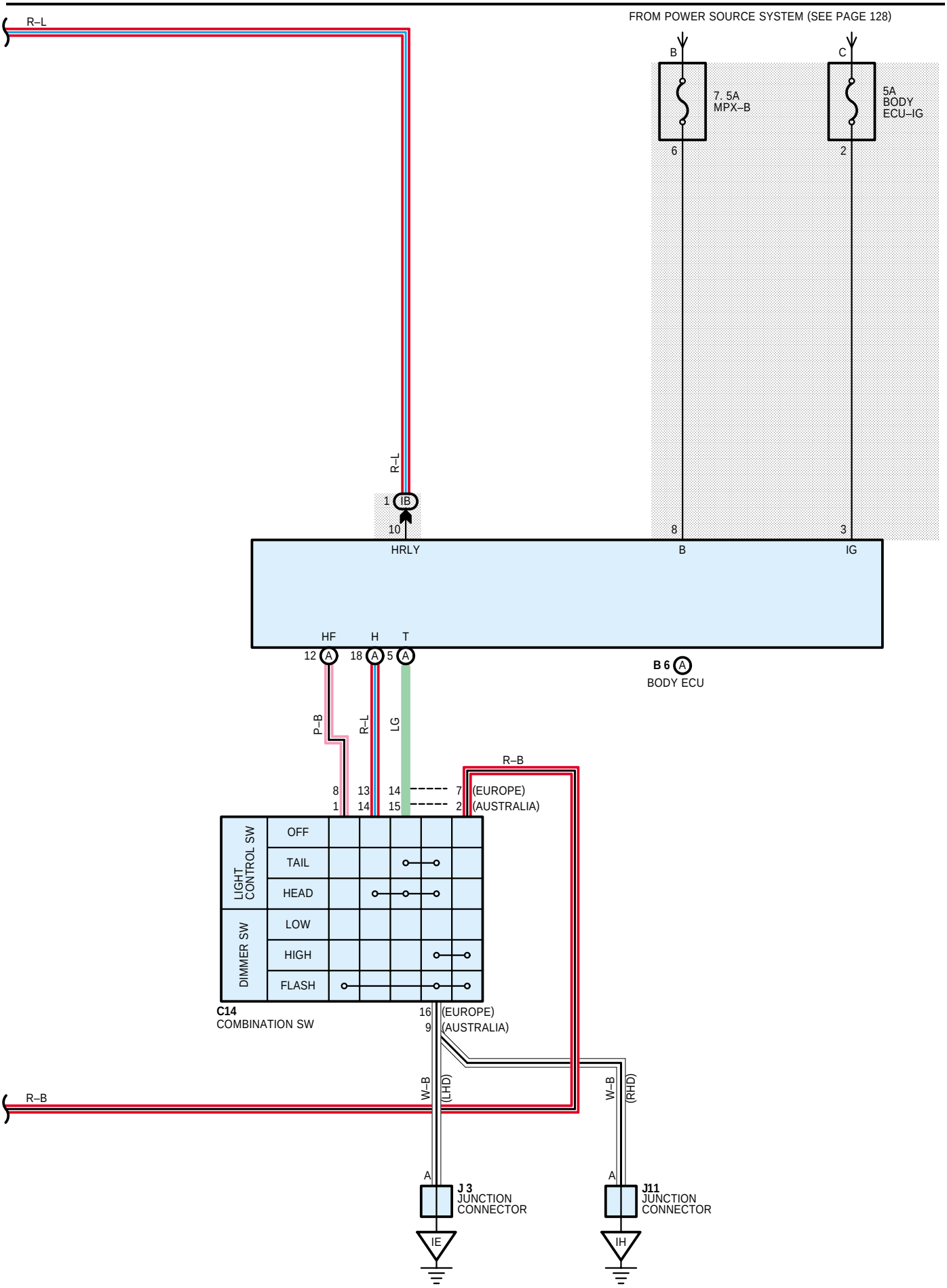
R–L
FROM POWER SOURCE SYSTEM (SEE PAGE 128)
B
C
7. 5A
MPX–B
5A
BODY
ECU–IG
6
2
R–L
1 IB
10
HRLY
8
B
3
IG
HF
H
T
12 A
18 A
5 A
B 6 A
BODY ECU
P–B
R–L
LG
R–B
8
1
13
14
14
15
7
2
(EUROPE)
(AUSTRALIA)
LIGHT CONTROL SW
OFF
TAIL
HEAD
DIMMER SW
LOW
HIGH
FLASH
C14
COMBINATION SW
16
9
(EUROPE)
(AUSTRALIA)
R–B
W–B
(LHD)
W–B
(RHD)
A
J 3
JUNCTION
CONNECTOR
A
J11
JUNCTION
CONNECTOR
IE
IH